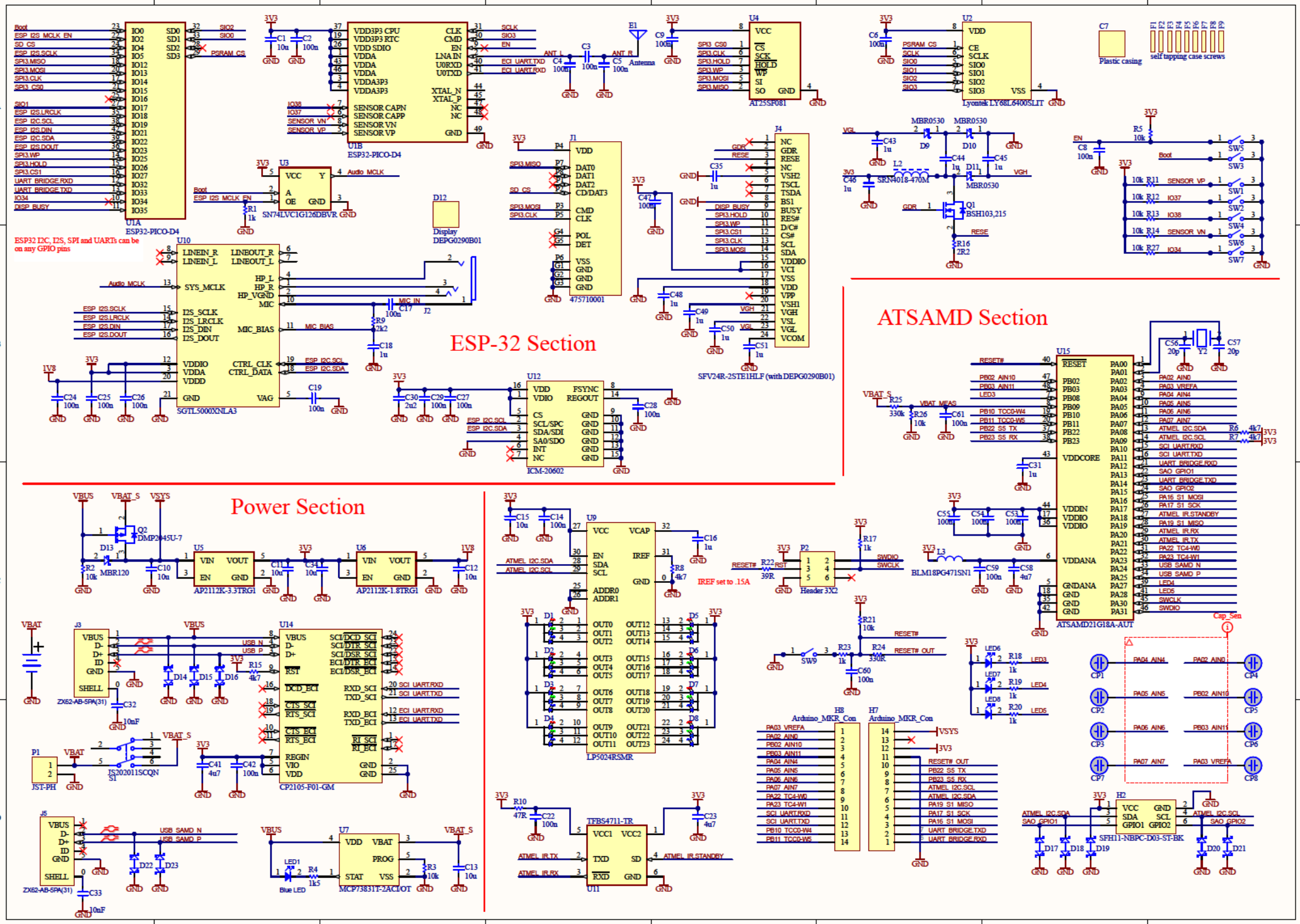
ESP-32 Section
ATSAMD Section
Power Section
U1A ESP32-PICO-D4
U1B ESP32-PICO-D4
ESP32 I2C, I2S, SPI and UARTs can be on any GPIO pins
U3 SN74LVC1G126DBVR
D12 Display DEPG0290B01
U10 SGTL5000XNLA3
J1 475710001
J4 SFV24R-2STE1HLF (with DEPG0290B01)
U12 ICM-20602
U4 AT25SF081
U2 Lyontek LY68L6400SLIT
C7 Plastic casing
self tapping case screws
U15 ATSAMD21G18A-AUT
Cap_Sen
U9 LP5024RSMR
IREF set to .15A
P2 Header 3X2
H8 Arduino_MKR_Con
H7 Arduino_MKR_Con
H2 SFH11-NBPC-D03-ST-BK
U11 TFBS4711-TR
U7 MCP73831T-2ACI/OT
Blue LED
U5 AP2112K-3.3TRG1
U6 AP2112K-1.8TRG1
Q2 DMP2045U-7
D13 MBR120
J3 ZX62-AB-SPA(31)
U14 CP2105-F01-GM
P1 JST-PH
S1 JS202011SCQN
J5 ZX62-AB-SPA(31)